DO NOT SCALE

HOLE LEGEND		
DRILLED OR PUNCHED HOLE TOLERANCES:	HOLE DIA.	TOL.
	.0135 to .125	+.003 −.001
	.126 to .250	+.004 −.001
	.251 to .500	+.005 −.001

IDENT.	DESCRIPTION	QTY.
A		

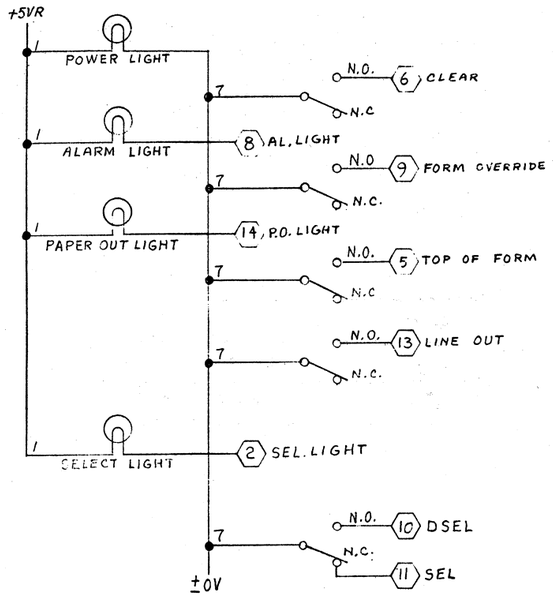

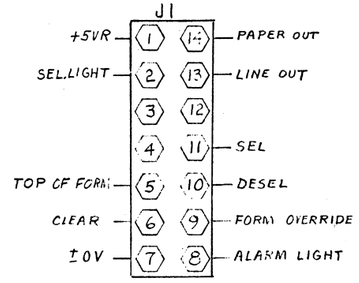

COMPONENT	W.L. PART NO
SW1 - SW5	325-2305
L1 - L4	370-0015
L1-L4 (HOLDER)	370-1020
J1	220-3027

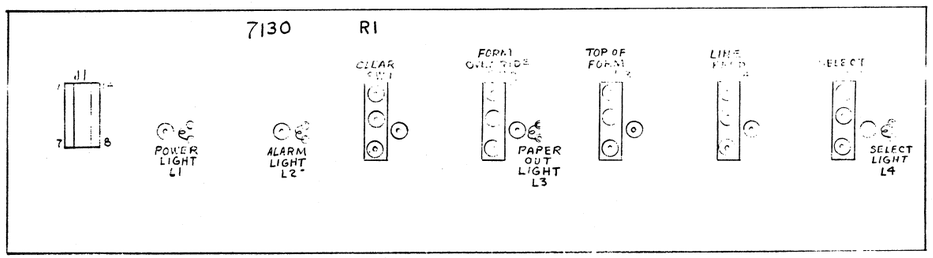

JAN 08 1979

0

NO.	REVISION	DATE	BY
0/0	ORIGINATED PER DWR# E339 APP'D: [illegible] 5/5/77	[illegible]	[illegible]
1/0	REVISED PER ECN #6832 APP'D: [illegible] 5/5/77	[illegible]	[illegible]

WANG PART NO	ITEM	QTY	NAME	MATERIAL	DESCRIPTION
Qty. Per Unit	FIRST USED ON	ASSY USED ON			

WANG LABORATORIES, INC. TEWKSBURY, MASS. U.S.A.

	BY	DATE	APPROVED BY	DATE
DWN	EK	5-3-77	E ENGR [illegible]	5/5/77
CHK			M ENGR	
E. C. CONTROL			MFG ENGR	

MATERIAL

MODEL NO. 77

SEE ENGRG SPECIFICATIONS No.

FINISH

TOL. EX. AS NOTED .XX ± .010 FRAC. ± 1/64 .XXX ± .005 ANG ± 1°30' FINISH 128 √

SCALE [illegible] SHT 4 OF 5

TITLE IOP CONTROL PANEL

WANG PART NUMBER	SIZE	DRAWING NUMBER	REV
210-7130	C	7130	1